[49VH7E/49VM5E Set Dimension]
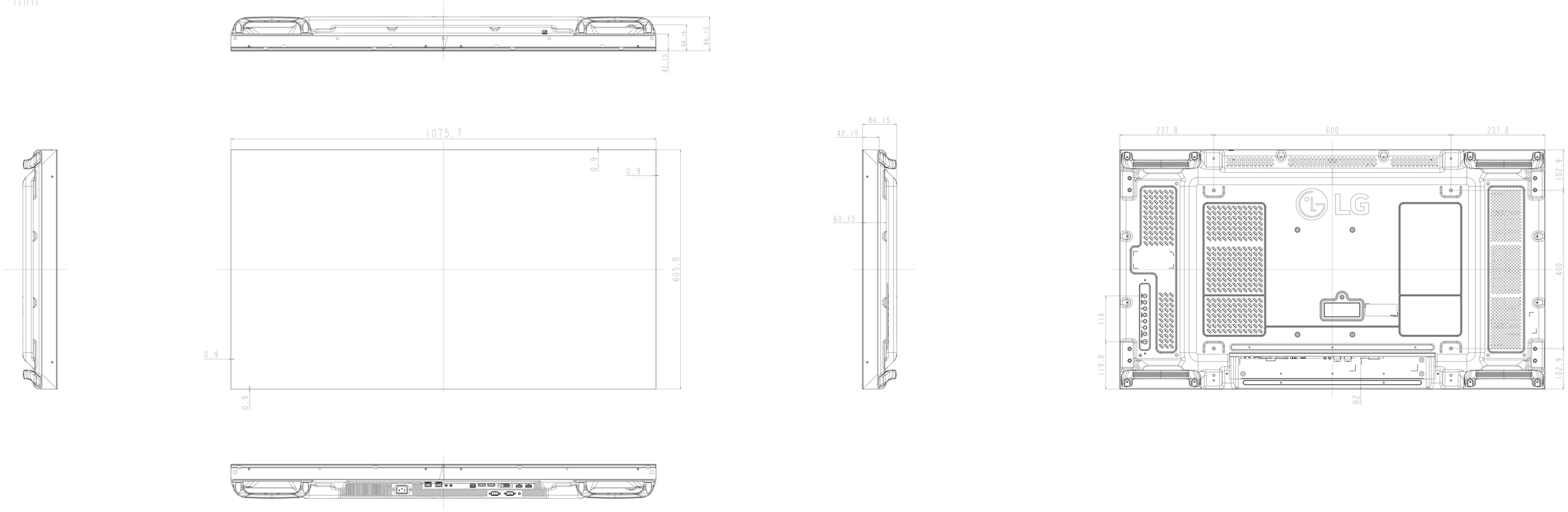
- Applied Model : 49VH7E/49VM5E
- Unit : mm